Lecture 14: Impedance and Admittance Matrices.

As in low frequency electrical circuits, a matrix description for portions of microwave circuits can prove useful in simulations and for understanding the behavior of the subcircuit, among other reasons.

Matrix descriptions are a very convenient way to integrate the effects of a subcircuit into a larger circuit without having to concern oneself with the specific details of the subcircuit.

We will primarily be interested in *ABCD* and *S* matrices in this course, though *Z* and *Y* matrices will also prove useful. The *ABCD* and *S* parameters are probably new to you. As we'll see, using these matrix descriptions is very similar to other two-port models for circuits you've seen before, such as *Z* and *Y* matrices.

Z Matrices

As an example of *Z* matrices, consider this two-port network:

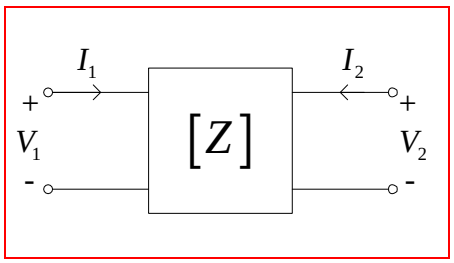

© 2016 Keith W. Whites

The Z-matrix description of this two-port is defined as

$$\boxed{\begin{bmatrix} V_1 \\ V_2 \end{bmatrix} = \underbrace{\begin{bmatrix} Z_{11} & Z_{12} \\ Z_{21} & Z_{22} \end{bmatrix}}_{\equiv [Z]} \cdot \begin{bmatrix} I_1 \\ I_2 \end{bmatrix}} \tag{1}$$

where

$$\boxed{Z_{ij} = \left. \frac{V_i}{I_j} \right|_{I_k = 0, \forall k \neq j}} \tag{4.28}$$

Example N14.1: As an example, let's determine the Z matrix for this T-network (Fig. 4.6) shown below:

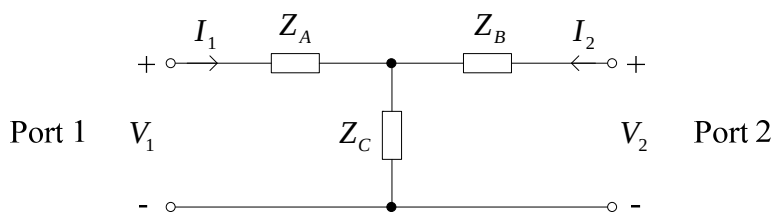

Applying (1) repeatedly to all four Z parameters, we find:

$$Z_{11} = \left. \frac{V_1}{I_1} \right|_{I_2=0} = Z_A + Z_C \qquad (Z_{\text{in}} \text{ at port 1 w/ port 2 o.c.})$$

$$Z_{12} = \left. \frac{V_1}{I_2} \right|_{I_1=0} \Rightarrow V_1 = I_2 Z_C \quad \text{(think of } I_2 \text{ as source)} \quad \therefore \; Z_{12} = Z_C$$

$$Z_{21} = \left. \frac{V_2}{I_1} \right|_{I_2=0} \Rightarrow V_2 = I_1 Z_C \quad \text{(think of } I_1 \text{ as source)} \quad \therefore \; Z_{21} = Z_C$$

$$Z_{22} = \left. \frac{V_2}{I_2} \right|_{I_1=0} = Z_B + Z_C \qquad (Z_{\text{in}} \text{ at port 2 w/ port 1 o.c.})$$

Collecting these calculations, then for this *T*-network:

$$[Z]=\begin{bmatrix} Z_A+Z_C & Z_C \\ Z_C & Z_B+Z_C \end{bmatrix}$$

Notice that this matrix is symmetrical. That is, $Z_{ij}=Z_{ji}$ for $i \neq j$. It can be shown that $[Z]$ will be symmetrical for all "reciprocal" networks. (See p. 8 for a definition of reciprocal.)

What's the usefulness of an impedance matrix description? For one thing, if a complicated circuit exists between the ports, one can conveniently amalgamate the electrical characteristics into this one matrix.

Second, if one has networks connected in series, it's very easy to combine the *Z* matrices. For example:

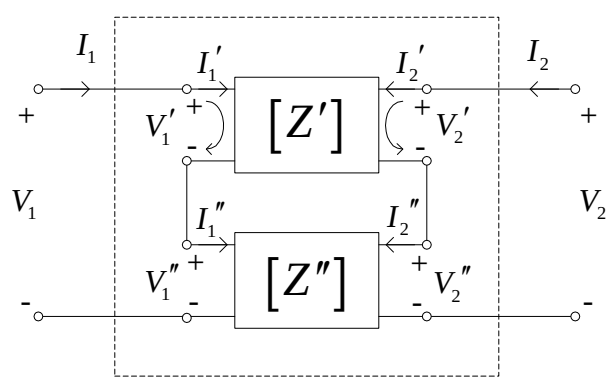

$[Z]$

By definition

$$\begin{bmatrix} V_1' \\ V_2' \end{bmatrix} = [Z'] \cdot \begin{bmatrix} I_1' \\ I_2' \end{bmatrix} \quad \text{and} \quad \begin{bmatrix} V_1'' \\ V_2'' \end{bmatrix} = [Z''] \cdot \begin{bmatrix} I_1'' \\ I_2'' \end{bmatrix}$$

From the figure we see that $I_1' = I_1''$, $I_2' = I_2''$, and that $V_1 = V_1' + V_1''$, $V_2 = V_2' + V_2''$. So, summing the above two matrix equations gives

$$\begin{bmatrix} V_1' + V_1'' \\ V_2' + V_2'' \end{bmatrix} = [Z'] \cdot \begin{bmatrix} I_1' \\ I_2' \end{bmatrix} + [Z''] \cdot \begin{bmatrix} I_1' \\ I_2' \end{bmatrix}$$

Also from the figure, note that $I_1 = I_1'$ and $I_2 = I_2'$. Therefore,

$$\begin{bmatrix} V_1 \\ V_2 \end{bmatrix} = \underbrace{\{[Z'] + [Z'']\}}_{[Z]} \cdot \begin{bmatrix} I_1 \\ I_2 \end{bmatrix} \tag{2}$$

From this result, we see that for a series connection of two-port networks, we can simply add the Z matrices to form a single "super" Z matrix

$$\boxed{[Z] = [Z'] + [Z'']} \tag{3}$$

that incorporates the electrical characteristics of both networks and their mutual interaction.

Y Matrices

A closely related characterization is the Y-matrix description of a network:

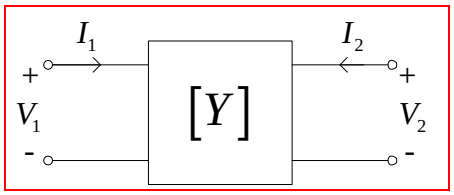

By definition:

$$\boxed{\begin{bmatrix} I_1 \\ I_2 \end{bmatrix} = \underbrace{\begin{bmatrix} Y_{11} & Y_{12} \\ Y_{21} & Y_{22} \end{bmatrix}}_{\equiv [Y]} \cdot \begin{bmatrix} V_1 \\ V_2 \end{bmatrix}} \tag{4}$$

where

$$\boxed{Y_{ij} = \left. \frac{I_i}{V_j} \right|_{V_k = 0, \forall k \neq j}} \tag{4.29}$$

Comparing (4) and (1) we see that

$$\boxed{[Y] = [Z]^{-1}} \tag{4.27),(5}$$

The *Y*-parameter description is useful when connecting networks in parallel:

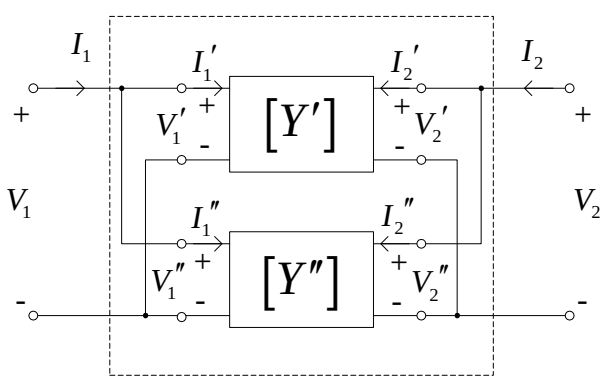

$[Y]$

From this diagram, we see that

$$\begin{bmatrix} I_1 \\ I_2 \end{bmatrix} = \begin{bmatrix} I_1' + I_1'' \\ I_2' + I_2'' \end{bmatrix} = [Y] \cdot \begin{bmatrix} V_1 \\ V_2 \end{bmatrix} \tag{6}$$

where

$$\boxed{[Y] = [Y'] + [Y'']} \tag{7}$$

Z and *Y* Matrices for Microwave Networks

We can easily generalize these Z and Y parameter descriptions for microwave networks and multiport networks.

Consider an N-port network connected to transmission lines (Fig. 4.5):

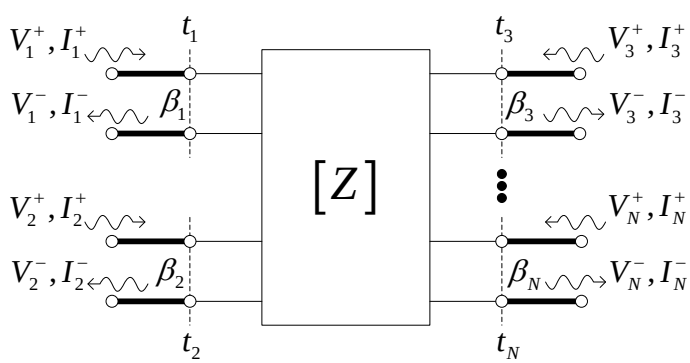

The locations t_n, $n = 1, \ldots, N$, are the terminal planes for each port. These are the positions on that TL where the phase is arbitrarily chosen equal to zero.

At these terminal planes (which are also called the phase planes), $z_n = 0$ so that the voltage on the nth TL

$$V_n(z_n) = V_n^+ e^{-j\beta_n z_n} + V_n^- e^{+j\beta_n z_n}$$

becomes $$V_n\left(z_n=0\right)=V_n^+ + V_n^- \qquad (4.24a),(8)$$

Likewise, $$I_n\left(z_n=0\right)=I_n^+ + I_n^- \qquad (4.24b),(9)$$

Since the telegrapher's equations are linear, any N linearly independent combinations of the $2N$ quantities V_n and I_n may be chosen as the independent variables.

For an impedance description, we choose I_n as the independent variables. Then,

$$\begin{bmatrix} V_1\left(z_1=0\right) \\ V_2\left(z_2=0\right) \\ \vdots \\ V_N\left(z_N=0\right) \end{bmatrix} = \begin{bmatrix} Z_{11} & \cdots & Z_{1N} \\ \vdots & \ddots & \vdots \\ Z_{N1} & \cdots & Z_{NN} \end{bmatrix} \cdot \begin{bmatrix} I_1\left(z_1=0\right) \\ I_2\left(z_2=0\right) \\ \vdots \\ I_N\left(z_N=0\right) \end{bmatrix} \qquad (10)$$

or, $$\left[V\right]=\left[Z\right]\cdot\left[I\right] \qquad (4.25),(11)$$

For an admittance description, we choose V_n as the independent variables:

$$\begin{bmatrix} I_1\left(z_1=0\right) \\ I_2\left(z_2=0\right) \\ \vdots \\ I_N\left(z_N=0\right) \end{bmatrix} = \begin{bmatrix} Y_{11} & \cdots & Y_{1N} \\ \vdots & \ddots & \vdots \\ Y_{N1} & \cdots & Y_{NN} \end{bmatrix} \cdot \begin{bmatrix} V_1\left(z_1=0\right) \\ V_2\left(z_2=0\right) \\ \vdots \\ V_N\left(z_N=0\right) \end{bmatrix} \qquad (12)$$

or, $$\left[I\right]=\left[Y\right]\cdot\left[V\right] \qquad (4.26),(13)$$

Global Characteristics of *Z* and *Y* Matrices

Finally, these are two extremely important properties of *Z* and *Y* matrices:

1. $$\boxed{Z_{ij} = Z_{ji}} \quad \text{and} \quad \boxed{Y_{ij} = Y_{ji}} \qquad (4.36),(14)$$

   That is, the matrices are symmetrical about the main diagonal for reciprocal networks. (We observed this characteristic in the *Z* matrix of an impedance T-network earlier in this lecture.)

   A reciprocal network is one where a source instrument and a measurement instrument can be exchanged between two ports and the measured quantity remains unchanged. All passive (and some active) circuits you've encountered in circuits and electronics courses are reciprocal networks.

2. For a lossless network

   $$\boxed{\Re e\left\{Z_{ij}\right\} = 0 \qquad \forall i, j} \qquad (4.39),(15)$$

   From (5), this implies that

   $$\boxed{\Re e\left\{Y_{ij}\right\} = 0 \qquad \forall i, j}$$

   In other words, for a lossless network the *Z* and *Y* matrices are purely imaginary.